7.8

Q2

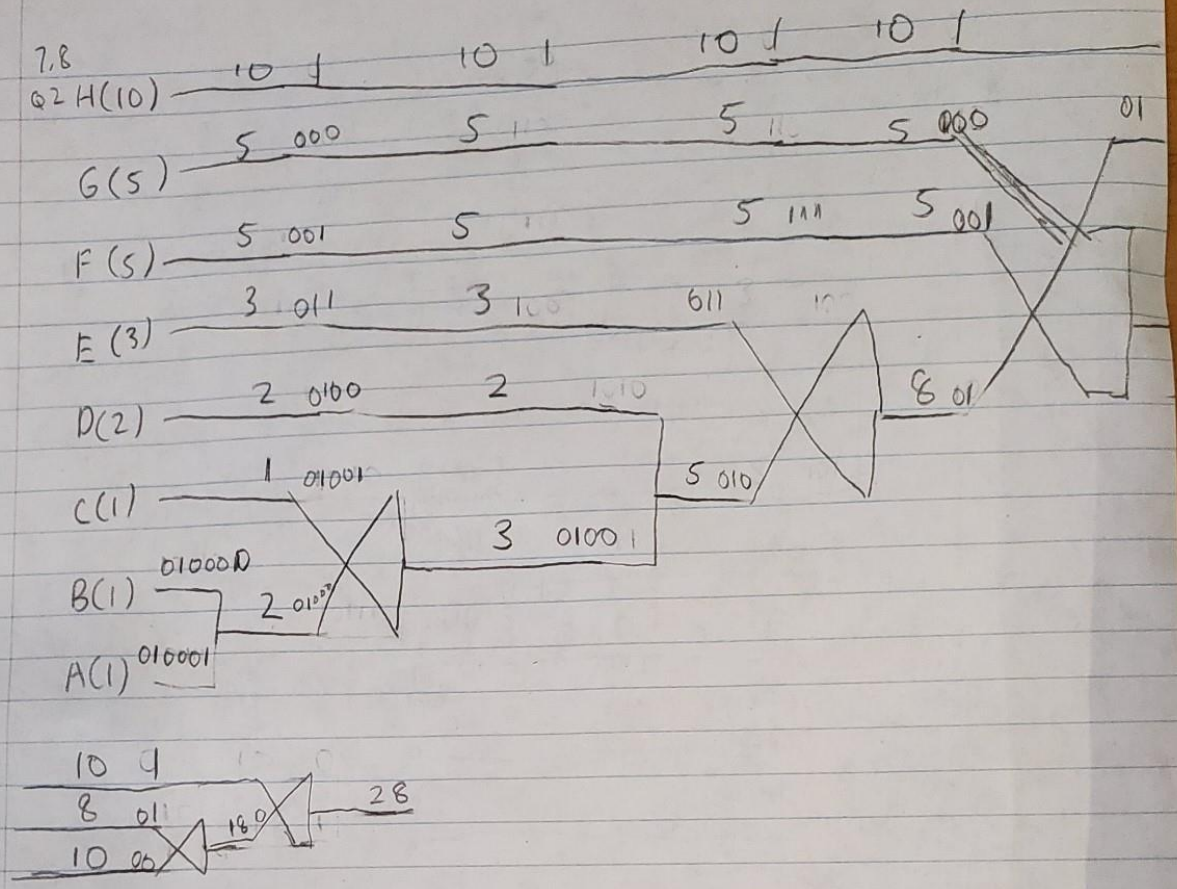

$L = \frac{10}{28}(1) + \frac{5}{28}(3) + \frac{5}{28}(3) + \frac{3}{28}(3) + \frac{2}{28}(4) + \frac{1}{28}(5) + \frac{1}{28}(6) + \frac{1}{28}(6) \approx 2.64$ bits /symbol. $H = -\left(\frac{10}{28}\log_2\left(\frac{10}{28}\right) + \frac{5}{28}\log_2\left(\frac{5}{28}\right)\cdot 2 + \frac{3}{28}\log_2\left(\frac{3}{28}\right) + \frac{2}{28}\log_2\left(\frac{2}{28}\right) + \frac{1}{28}\log_2\left(\frac{1}{28}\right)\cdot 3\right)$ ≈ 2.55 bits/ symbol

Q3. a) $P(99) = \frac{1}{8}$ $P(20) = \frac{1}{8}$ $P(50) = \frac{1}{4}$ $P(0) = \frac{1}{2}$ $\eta = -\left(\frac{1}{8}\log_2\left(\frac{1}{8}\right)\cdot 2 + \frac{1}{4}\log_2\left(\frac{1}{4}\right) + \frac{1}{2}\log_2\left(\frac{1}{2}\right)\right) = 1.75$ bits/symbol.

b)

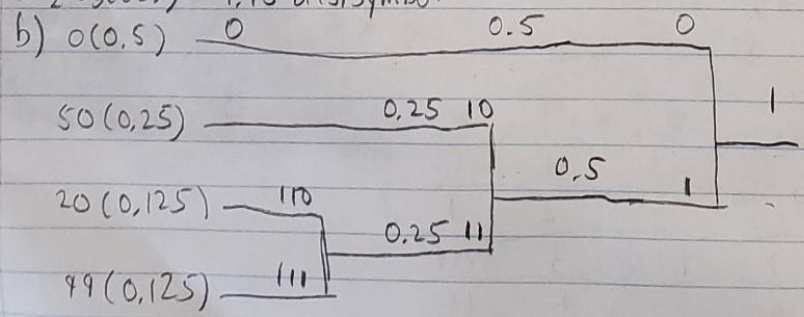

c) $L = 0.5(1) + 0.25(2) + 0.125(3)\cdot 2 = 1.75$ bits/symbol. The average code word length is equal to the entropy.

Hilroy

6.a) entropy: $-\left(\frac{7}{8}\log_2\left(\frac{7}{8}\right) + \frac{1}{8}\log_2\left(\frac{1}{8}\right)\right) \approx 0.544$ bits/symbol. Set of Huffman codes: 0, 1 bitrate: $\frac{7}{8}\cdot 1 + \frac{1}{8} = 1$ bit/symbol

b) 00, 01, 10, 11 $\left(\frac{7}{8}\cdot\frac{7}{8}\right) = \frac{49}{64}$ $\frac{7}{8}\cdot\frac{1}{8} = \frac{7}{64}$ $\frac{1}{8}\cdot\frac{7}{8} = \frac{7}{64}$ $\frac{1}{8}\cdot\frac{1}{8} = \frac{1}{64}$

bitrate: $\frac{49}{64} + \frac{7}{64}\cdot 2 + \frac{7}{64}\cdot 3 + \frac{1}{64}\cdot 3 \approx 1.36$ bits/~~symbol~~ 2symbol ≈ 0.68 bits/symbol.

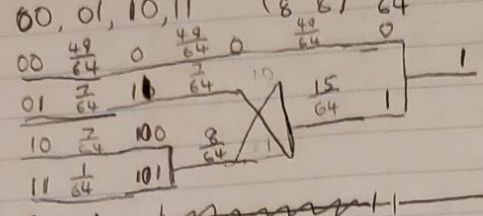

9. Input 1 0 0.8 1.0

Input 3 0 0.656 0.8 $2(x-0.5)$ 1

Input 2 0.312 0.5424 0.54816 0.6 $2(x-0.5)$ 1

0.0848 0.09632 $2x$ 0

0.1696 0.19264 $2x$ 0

0.3392 0.38528 $2x$ 0

Input 1 0.6784 0.77056 $2(x-0.5)$ 1

0.3568 0.54112

0.3568 0.504256 1

Code: 1100011

13.

	C	output	code	string
1	0		1	0
			2	1
0	1	1	3	01
1	1	2	4	11
1	0	2	5	10
0	0	1	6	00
0	1	3	7	011
01	1			

→ 1 EOF 2

dict: 1:0 2:1 3:01 4:11
5:10 6:00 7:011

output:

a: 2+1+1+1+2+1+2+1 = 11 c: 1+2+2+2+2 = 9

b: 1+3+1+3 = 8 d: 4

EX 1, (1) $= -\left(\frac{11}{32}\log_2\left(\frac{11}{32}\right) + \frac{8}{32}\log_2\left(\frac{8}{32}\right) + \frac{9}{32}\log_2\left(\frac{9}{32}\right) + \frac{4}{32}\log_2\left(\frac{4}{32}\right)\right) \approx 1.92$ bits/symbol

aa bc cc da ba bb ac cd ad da cc ba ac ca bb ba

aa: $\frac{1}{16}$ bc: $\frac{1}{16}$ cc: $\frac{2}{16}$ da: $\frac{2}{16}$ ba: $\frac{3}{16}$ bb: $\frac{2}{16}$ ac: $\frac{2}{16}$ cd: $\frac{1}{16}$ ad: $\frac{1}{16}$

ca: $\frac{1}{16}$ Second order entropy: $-\left(\frac{1}{16}\log_2\left(\frac{1}{16}\right)\cdot 5 + \frac{2}{16}\log_2\left(\frac{2}{16}\right)\cdot 4 + \frac{3}{16}\log_2\left(\frac{3}{16}\right)\right) \approx 3.20$

bits / 2 symbols. ≈ 1.601 bits/symbol

(2) $2\left(\frac{3}{16}\right) + 3\left(\frac{2}{16}\right)\cdot 4 + 4\left(\frac{1}{16}\right)\cdot 3 + 5\left(\frac{1}{16}\right)\cdot 2 \approx 3.25$ bits / 2 symbols = 1.625 bits/symbo

EX2 (1)

s	c	output	code	string
a	c	0	3	ac
c	a	2	4	ca
a	c			
ac	a	3	5	aca
a	b	0	6	ab

output: 02301

b EOF 1

(2) 0: a 1: b 2: c 3: ac 4: ca 5: aca 6: ab

EX4.

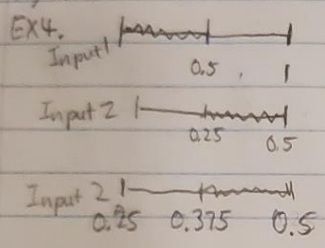

Final bound: [0.375, 0.6875)

EX5. 010 000 110 11

b a c c

symbol[0] = 'b' length = 3 newbits = 000

symbol[1] = 'a' length = 2 newbits = 11

symbol[2] = 'c' length = 3 newbits = 011

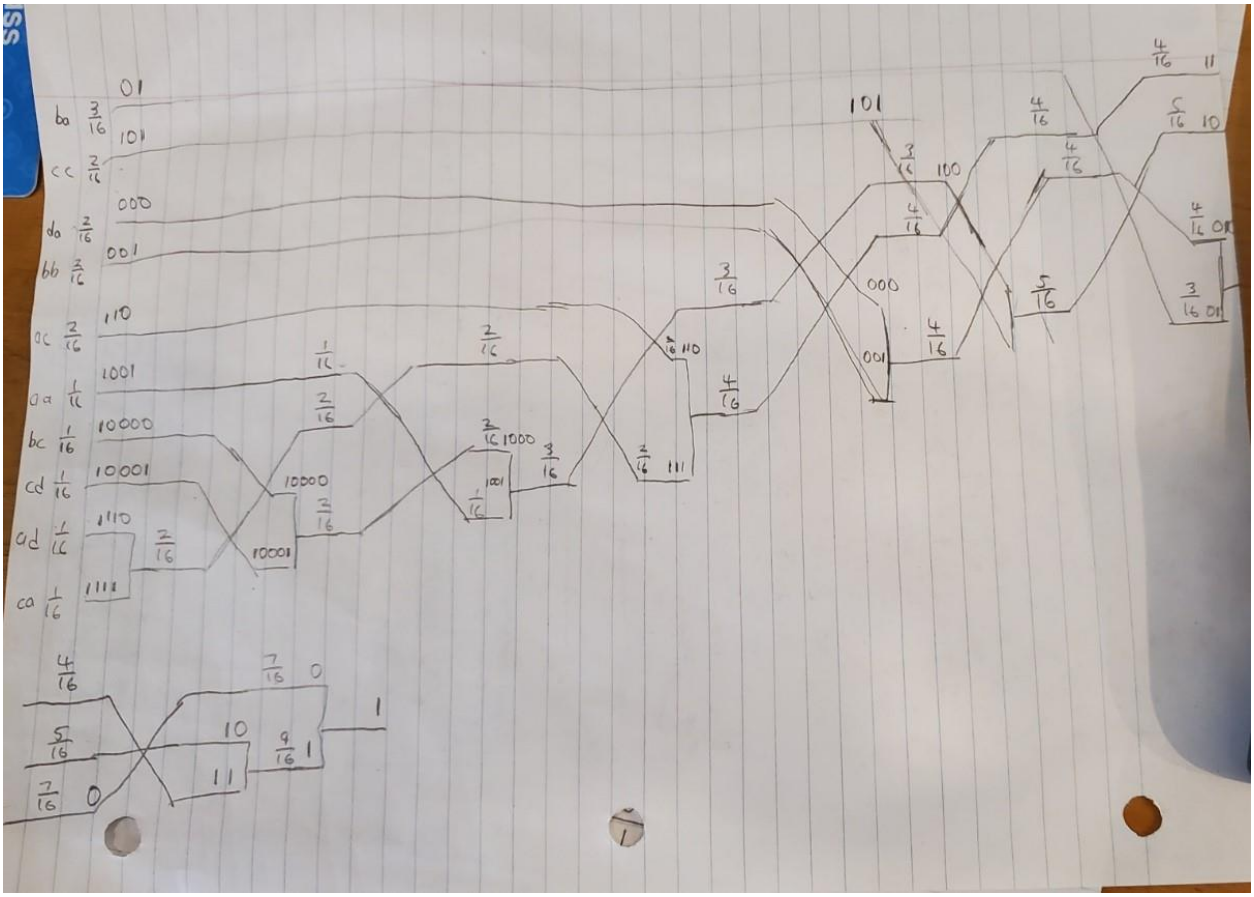
ba 3/16 01
cc 2/16 101
da 2/16 000
bb 2/16 001
ac 2/16 110
aa 1/16 1001
bc 1/16 10000
cd 1/16 10001
ad 1/16 1110
ca 1/16 1111
4/16
5/16
7/16 0
7/16 0
10
11
9/16 1
1
101
3/16 100
4/16
000
001
4/16
3/16
4/16
3/16 110
4/16
2/16 111
3/16 1000
1/16 1001
3/16
2/16
1/16
2/16
10000
2/16
10001
2/16
4/16 11
5/16 10
4/16 01
3/16 01
5/16